MODEL 1210-2626

CONTAINER FORK TUNNEL

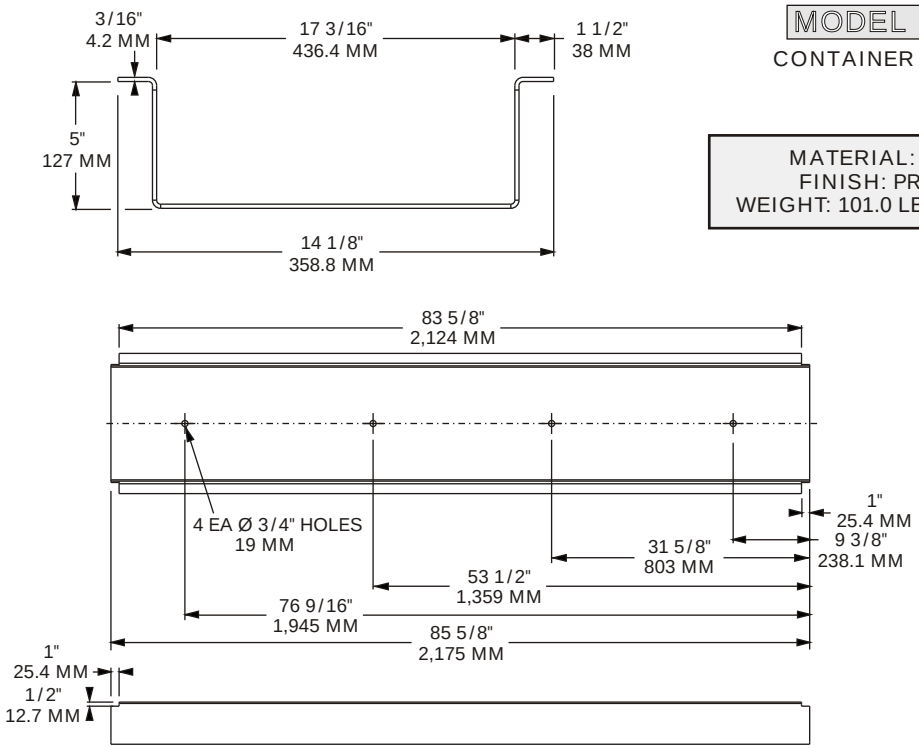

MATERIAL: STEEL
FINISH: PRIMER
WEIGHT: 101.0 LBS / 45.8 Kg

NEW

MODEL 1210-2750

GOOSENECK TUNNEL RAIL

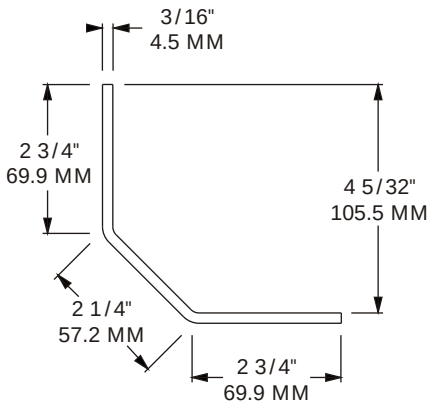

LENGTH: 10' / 3,048 MM
MATERIAL: CORTEN STEEL FINISH: GRAY PRIMER
WEIGHT: 47.0 LBS / 21.3 Kg

MODEL 1210-7641

GOOSENECK TUNNEL RAIL

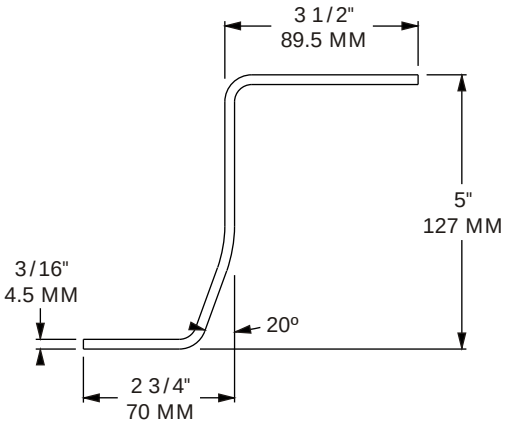

LENGTH: 10' 7/8" / 3,307 MM
MATERIAL: CORTEN STEEL FINISH: GRAY PRIMER
WEIGHT: 54.3 LBS / 24.6 Kg

904-696-0010 FAX 904-696-0019
E-mail: sales@buffersusa.com