CABLE BINDER
OVER-CENTER TYPE

MODEL 3703-7397

CABLE BINDER ASSEMBLY

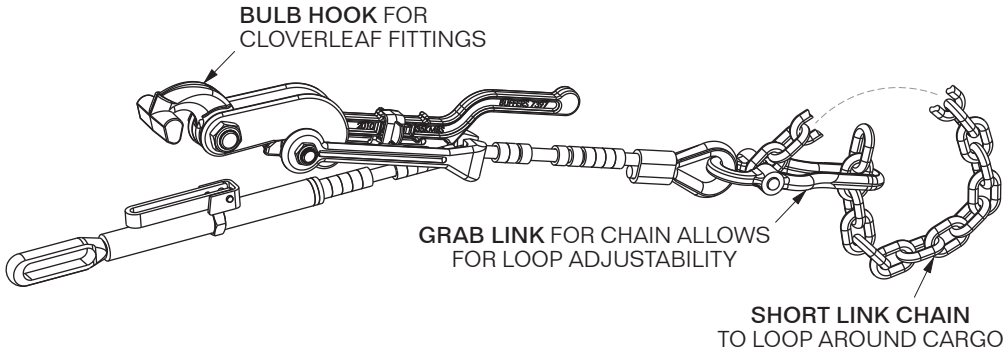

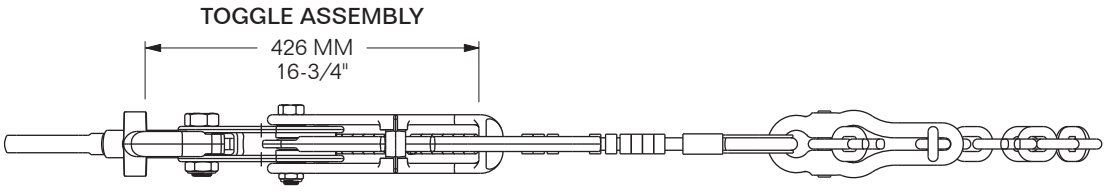

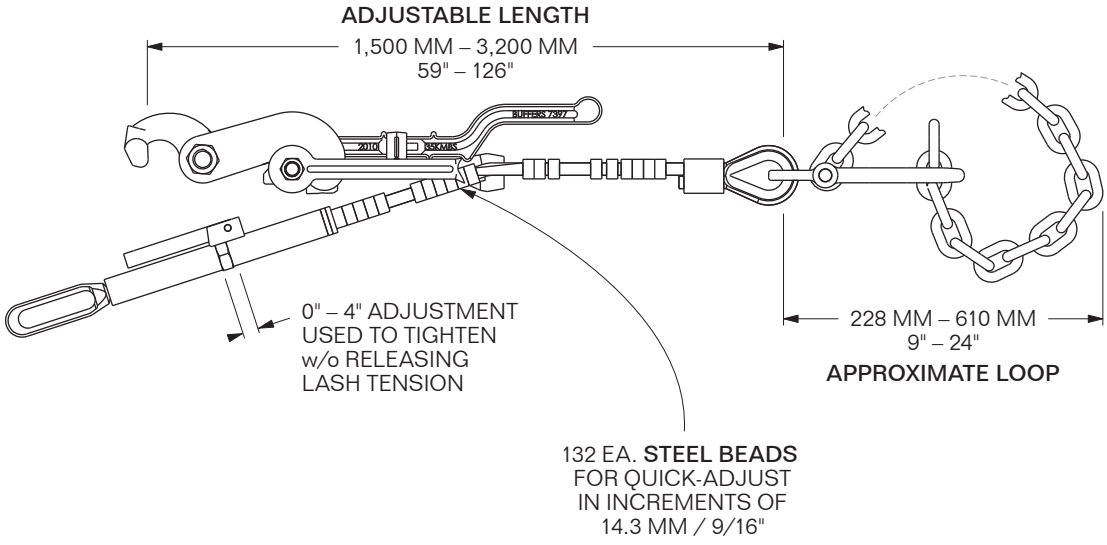

MIN. B.S.: 35,000 LBS / 15.87 M. TON

SUB FOR: PECK & HALE 35M/819
MATERIAL: FORGED STEEL, CAST STEEL, STAINLESS STEEL & ZINC-PLATED
FINISH: HOT-DIP GALVANIZED (HDG) or SELF-COLOR ON SS PARTS
WEIGHT: 22.5 Kg / 49.6 LBS

BUFFERS USA INC ®
"The Intermodal Hardware Specialists"

904-696-0010 FAX: 904-696-0019
E-mail: sales@buffersusa.com