UNLOCKING POLE
FIXED-LENGTH TYPE

MACGREGOR ALLSET

5004-OR-W-1063839

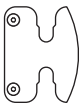

Bolted on to OR-W Unlocking Pole

STANDARD POLE
w/ AH-23 Head

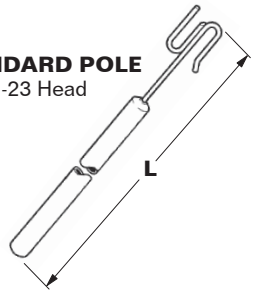

5004-AH-23

5004-AH-24

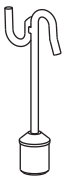

5004-AH-25

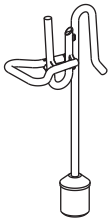

TO BE USED FROM DECK OF SHIP UNLESS OTHERWISE NOTED.

MODEL	ALLSET #	MACGREGOR	LENGTH*		REACH	WEIGHT		NOTES
5004-UP-06-W/AH-23	**APB-1.8M**	**OR-W/1.8**	1.8 M	5.9'	2 HIGH	1.5 Kg	3.2 LBS	
5004-UP-09-W/AH-23	—	—	2.7 M	8.9'	2 HIGH	2 Kg	4.4 LBS	
5004-UP-13-W/AH-25	—	—	4 M	13.1'	—	2.5 Kg	5.4 LBS	PIGGYBACK
5004-UP-13-W/AH-24	**APB-4.0M**	**OR-W/3.6**	4 M	13.1'	—	2.2 Kg	4.9 LBS	FROM TOP
5004-UP-16-W/AH-23	—	—	4.9 M	16.1'	3 HIGH	2.4 Kg	5.4 LBS	
5004-UP-16-W/AH-25	—	—	4.9 M	16.1'	3 HIGH	2.5 Kg	5.4 LBS	
5004-UP-18-W/AH-23	**APB-5.1M**	**OR-W/5.1**	5.5 M	18'	3 HIGH	2.9 Kg	6.5 LBS	
5004-UP-20-W/AH-23	—	—	6.1 M	20'	3 HIGH	3.4 Kg	7.6 LBS	
5004-UP-24-W/AH-23	—	—	7.3 M	23.9'	4 HIGH	3.7 Kg	8.1 LBS	
5004-UP-26-W/AH-25	—	—	7.9 M	26'	4 HIGH	4.4 Kg	9.9 LBS	
5004-UP-26-W/AH-23	**APB-7.7M**	**OR-W/7.8**	7.9 M	25.9'	4 HIGH	4.3 Kg	9.6 LBS	
5004-UP-35-W/AH-23	**APB-10.3M**	**OR-W/10.4**	10.3 M	33.8'	5 HIGH	5.4 Kg	12 LBS	
5004-UP-35-W/AH-25	—	—	10.3 M	33.8'	—	5.6 Kg	12.3 LBS	
5004-UP-09-W/UP-02	—	9' EXTENSION for UP-35 Unlocking Pole Tube 1.8 Kg / 4 LBS						
5004-1623	—	BOLT-ON COUPLING w/ Hardware for 5004-UP-35-W/AH-23 0.6 Kg / 1.3 LBS						

*Other lengths can be supplied upon request.

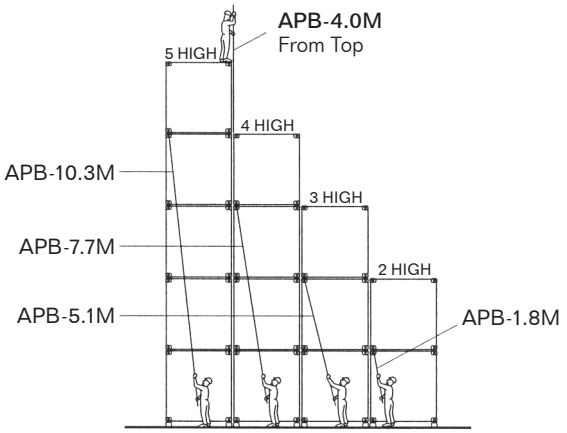

Piggyback

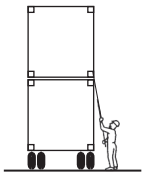

MATERIAL: AGE-HARDENED ALUMINUM TUBE, STEEL ACTUATOR HEAD **TUBE FINISH:** MILLED

BUFFERS USA INC ®
"The Intermodal Hardware Specialists"

904-696-0010
E-mail: sales@buffersusa.com

UNLOCKING POLE

EXTENDABLE, QUICK-COUPLING TYPE w/ PUSH-BUTTON

MACGREGOR ALLSET

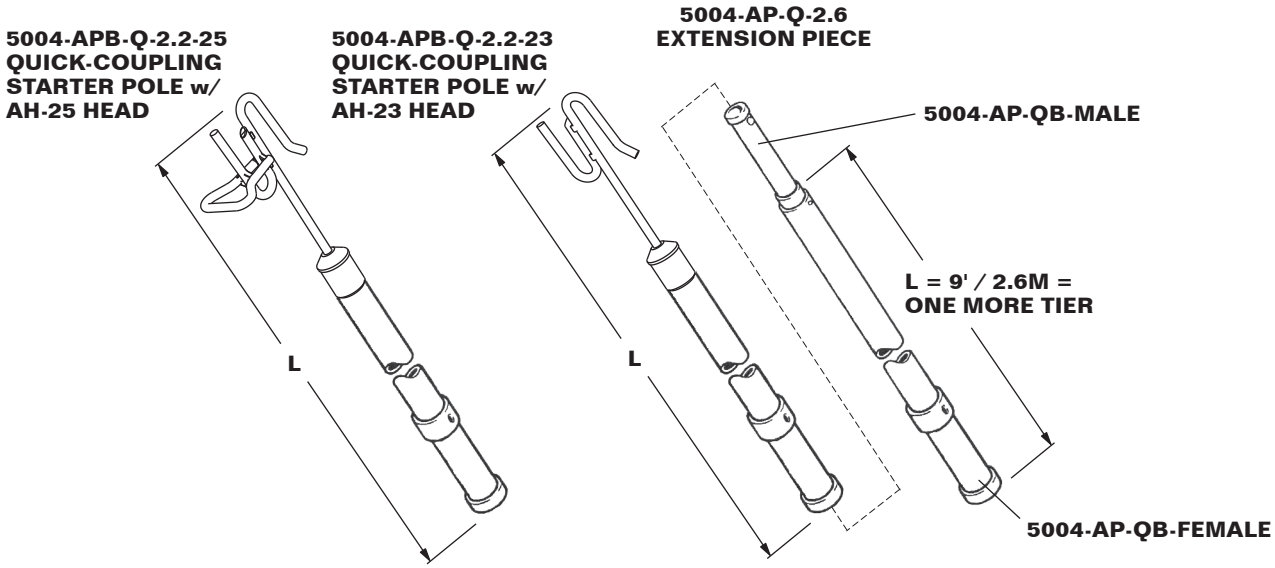

ITEM	MODEL	TYPE	LENGTH		WEIGHT		REACH
1 2	**5004-APB-Q-2.2-23** **5004-APB-Q-2.2-25**	STARTER	2.2 M	7'	2 Kg	4.4 LBS	2 HIGH
3 4	**5004-APB-Q-5.0-23** **5004-APB-Q-5.0-25**	STARTER	5 M	16'	3 Kg	6.6 LBS	3 HIGH
5 6	**5004-APB-Q-5.4-23** **5004-APB-Q-5.4-25**	STARTER	5.4 M	18'	3.4 Kg	7.5 LBS	3 HIGH
7 8	**5004-APB-Q-7.7-23** **5004-APB-Q-7.7-25**	STARTER	7.9 M	26'	4.9 Kg	11 LBS	4 HIGH
9	**5004-AP-Q-2.6**	EXTENSION	2.6 M	9'	2.9 Kg	6.4 LBS	ONE TIER MORE
10	**5004-APB-Q-KIT/APM-23**	SET	1 ea. ITEM 1 3 ea. ITEM 9		10.7 Kg	23.6 LBS	2 – 5 HIGH
11	**5004-APB-Q-KIT/APM-25**	SET	1 ea. ITEM 2 3 ea. ITEM 9		10.7 Kg	23.6 LBS	2 – 5 HIGH

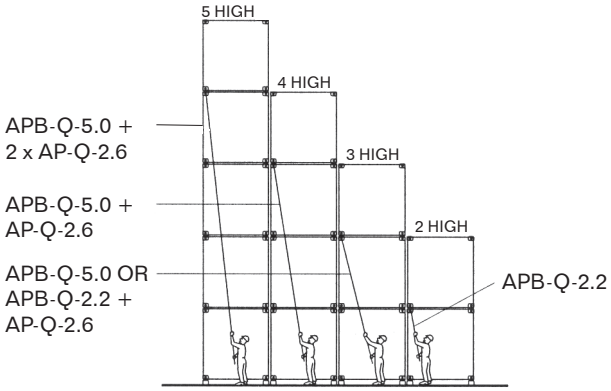

MATERIAL: AGE-HARDENED ALUMINUM TUBE / STAINLESS STEEL ACTUATOR HEAD.

BUFFERS USA INC ®

"The Intermodal Hardware Specialists"

904-696-0010

E-mail: sales@buffersusa.com

UNLOCKING POLE KITS

EXTENDABLE, SPRING-BUTTON TYPE

STANDARD LENGTH w/ 9' EXTENSION POLE

MACGREGOR ALLSET

MODEL 5004-6365-EP-CV20

KIT INCLUDES: 1 ea.
5004-6365-1-CV20-EP-87
UNLOCKING POLE w/ PLATE HEAD,
3 ea. **5004-6365-2-EP** EXTENSION POLES
WEIGHT: 7.4 Kg / 16.35 LBS

MODEL 5004-6365-EP

KIT INCLUDES: 1 ea.
5004-6365-1-EP-AH23-87
UNLOCKING POLE w/ HOOK HEAD,
3 ea. **5004-6365-2-EP** EXTENSION POLES
WEIGHT: 7.5 Kg / 16.5 LBS

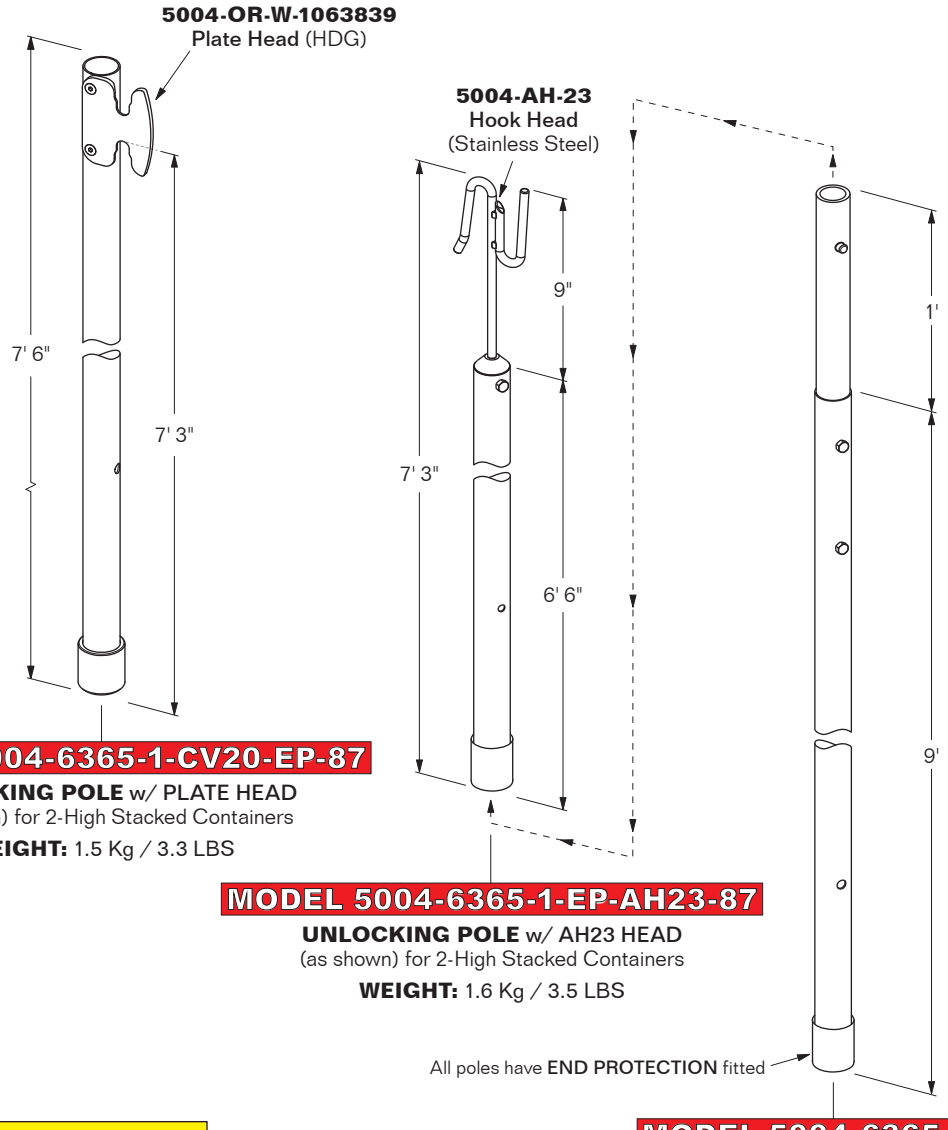

MODEL 5004-6365-1-CV20-EP-87

UNLOCKING POLE w/ PLATE HEAD
(as shown) for 2-High Stacked Containers
WEIGHT: 1.5 Kg / 3.3 LBS

MODEL 5004-6365-1-EP-AH23-87

UNLOCKING POLE w/ AH23 HEAD
(as shown) for 2-High Stacked Containers
WEIGHT: 1.6 Kg / 3.5 LBS

All poles have **END PROTECTION** fitted

MODEL 5004-6365-2-EP

9' EXTENSION POLE
(as shown) for up to 5-High Stacked Containers
WEIGHT: 2 Kg / 4.35 LBS

NOTE: Other lengths of any pole can be made upon request.

TUBE MATERIAL: ALUMINUM **FINISH:** SELF-COLOR

BUFFERS USA INC ®
"The Intermodal Hardware Specialists"

904-696-0010
E-mail: sales@buffersusa.com

UNLOCKING POLE KITS

EXTENDABLE, SPRING-BUTTON TYPE

STANDARD LENGTH w/ 6.5' EXTENSION POLE

MACGREGOR ALLSET

MODEL 5004-6365-6.5-EP

KIT INCLUDES: 1 ea. **5004-6365-1-EP** UNLOCKING POLE w/ HOOK HEAD
& 3 ea. **5004-6365-2/6.5-EP** EXTENSION POLES w/ END PROTECTION

WEIGHT: 6.9 Kg / 15.3 LBS

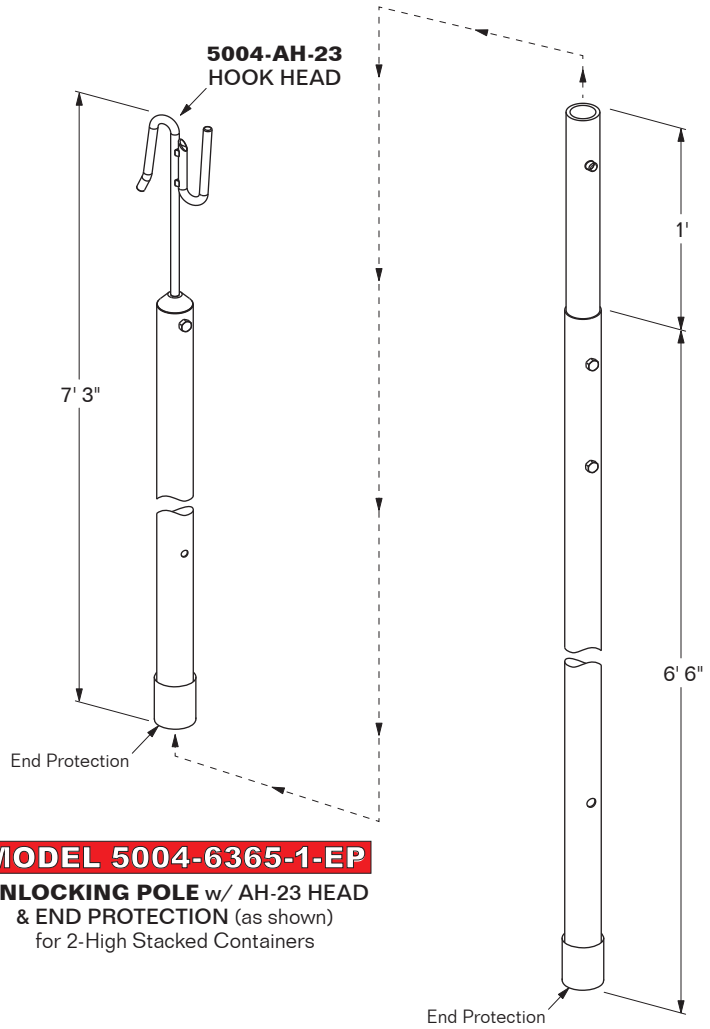

MODEL 5004-6365-1-EP

UNLOCKING POLE w/ AH-23 HEAD
& END PROTECTION (as shown)
for 2-High Stacked Containers

MODEL 5004-6365-2/6.5-EP

6.5' EXTENSION POLE
w/ END PROTECTION (as shown)
for up to 5-High Stacked Containers

NOTE: Other lengths of any pole can be made upon request.

MATERIAL: ALUMINUM TUBES / STAINLESS STEEL HEAD **FINISH:** SELF-COLOR
5004-6365-1-EP WEIGHT: 1.5 Kg / 3.3 LBS **5004-6365-2/6.5-EP WEIGHT:** 1.8 Kg / 4 LBS

BUFFERS USA INC ®
"The Intermodal Hardware Specialists"

904-696-0010
E-mail: sales@buffersusa.com

UNLOCKING POLE COMPONENTS

EXTENDABLE, SPRING-BUTTON TYPE

SHORTER LENGTH EXTENSION POLES

MACGREGOR ALLSET

MODEL 5004-6365-2-EP-36

UNLOCKING POLE

3′ Extension

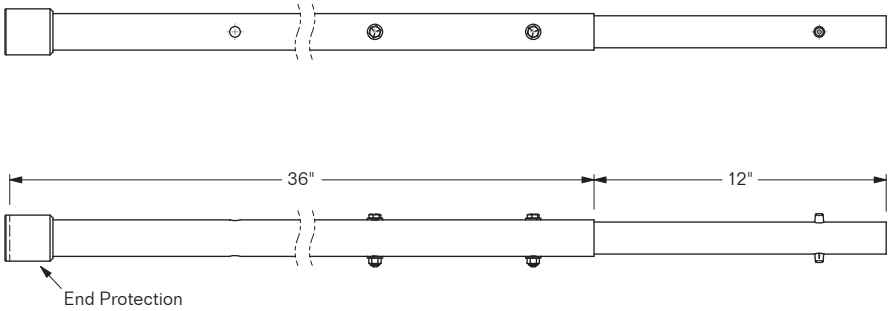

MATERIAL: ALUMINUM **FINISH:** SELF-COLOR **WEIGHT:** 1.1 Kg / 2.5 LBS

NOTE: Other lengths of any pole can be made upon request.

BUFFERS USA INC ®

"The Intermodal Hardware Specialists"

904-696-0010

E-mail: sales@buffersusa.com

UNLOCKING POLE
for KOEI KE-11A
SEMI-AUTOMATIC TWISTLOCK

MACGREGOR ALLSET

MODEL 5004-UP-06-W/2937
MODEL 5004-UP-16-W/2937
MODEL 5004-UP-26-W/2937

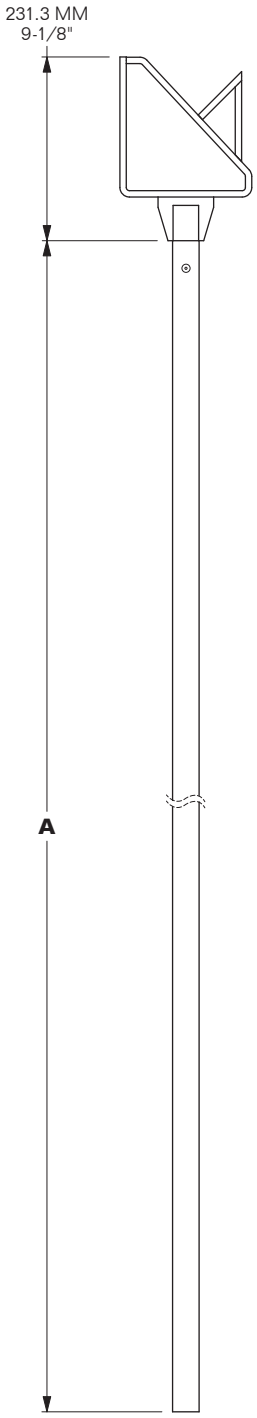

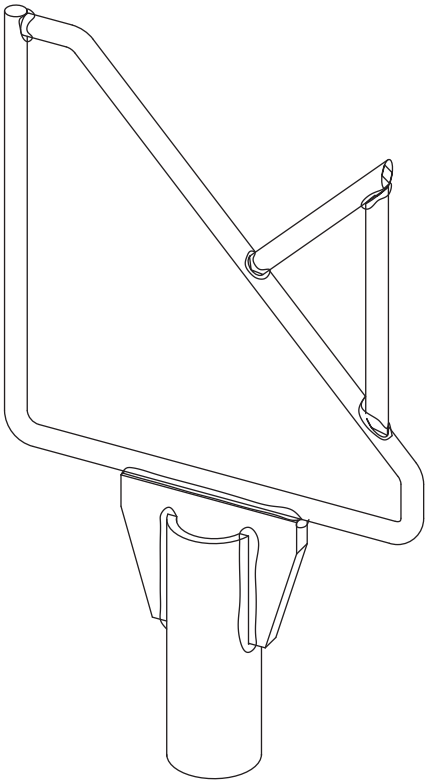

5004-2937 Head made from steel, bolted to 1-1/2" Aluminum Pole.

MODEL	A	WEIGHT
5004-UP-06-W/2937	198.2 MM 6' 6"	1.87 Kg 4.13 LBS
5004-UP-16-W/2937	4,877 MM 16'	3.35 Kg 7.38 LBS
5004-UP-26-W/2937	7,925 MM 26'	4.91 Kg 10.8 LBS

BUFFERS USA INC ®
"The Intermodal Hardware Specialists"

904-696-0010
E-mail: sales@buffersusa.com

UNLOCKING POLE HEADS

MODEL 5004-AH-23

Standard S-Hook Type

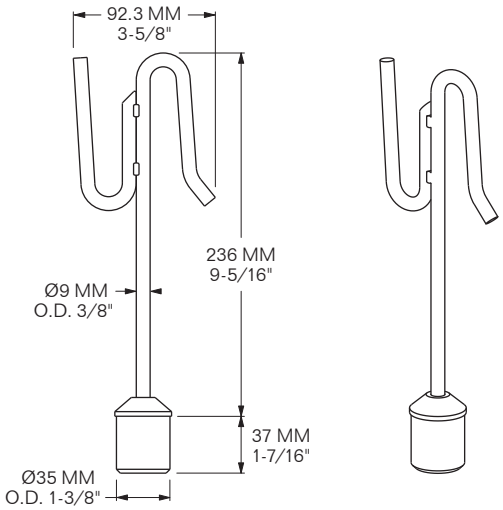

REFERENCE: 6365-1
MATERIAL: STAINLESS STEEL / ALUMINUM
FINISH: SELF-COLOR
WEIGHT: 0.38 Kg / 0.83 LBS

MODEL 5004-AH-24

From Top of Stack Type

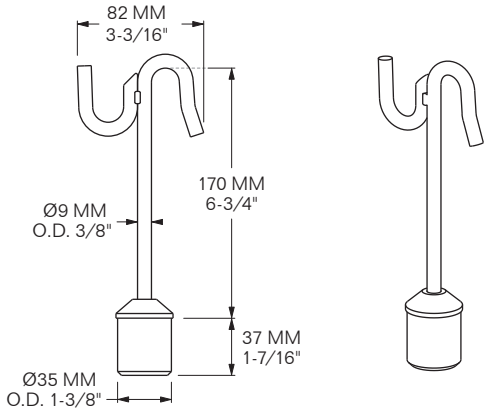

REFERENCE: 7683-1
MATERIAL: STAINLESS STEEL / ALUMINUM
FINISH: SELF-COLOR
WEIGHT: 0.28 Kg / 0.62 LBS

MODEL 5004-AH-25

Piggyback Type
S-Hook w/ Triangle

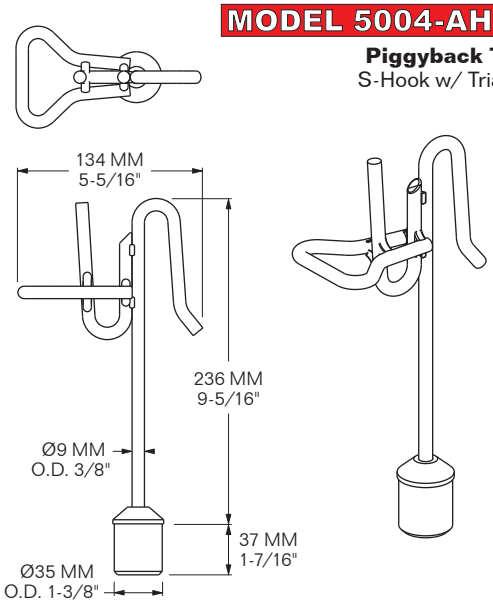

REFERENCE: 7684-1
MATERIAL: STAINLESS STEEL / ALUMINUM
FINISH: SELF-COLOR
WEIGHT: 0.50 Kg / 1.09 LBS

MODEL 5004-AH-23-TQ

For Telescopic Pole

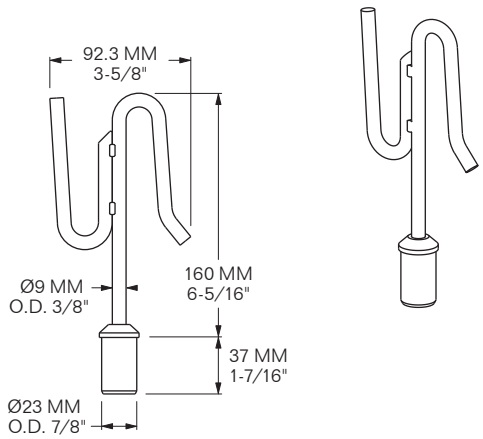

REFERENCE: 7694-1
MATERIAL: STAINLESS STEEL / ALUMINUM
FINISH: SELF-COLOR
WEIGHT: 0.28 Kg / 0.61 LBS

BUFFERS USA INC ®
"The Intermodal Hardware Specialists"

904-696-0010
E-mail: sales@buffersusa.com

UNLOCKING POLE KITS & COMPONENTS

MANUAL TWISTLOCK TYPE

MACGREGOR ALLSET

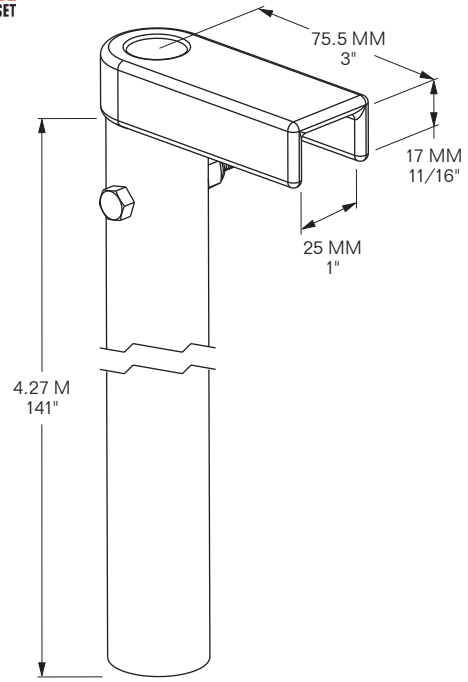

MODEL 5004-UP-7-W/1218

UNLOCKING POLE ASSEMBLY / KIT
7' x O.D. 1.25" Aluminum Pole
w/ Galvanized Steel Head
WEIGHT: 1.5 Kg / 3.31 LBS

MODEL 5004-UP-14-W/1218

UNLOCKING POLE ASSEMBLY / KIT
14' x O.D. 1.25" Aluminum Pole
w/ Galvanized Steel Head
WEIGHT: 2.55 Kg / 5.62 LBS

MODEL 5004-1218

GALVANIZED STEEL HEAD ONLY
WEIGHT: 0.43 Kg / 0.95 LBS

MODEL 5004-UP-7-1.25

7' ALUMINUM POLE ONLY
1.25" O.D. POLE
WEIGHT: 1.05 Kg / 2.31 LBS

MODEL 5004-UP-14-1.25

14' ALUMINUM POLE ONLY
1.25" O.D. POLE
WEIGHT: 2.1 Kg / 4.62 LBS

MODEL 5004-1628

T-HANDLE FOR UNLOCKING POLES
Fits 1-1/2" Tube

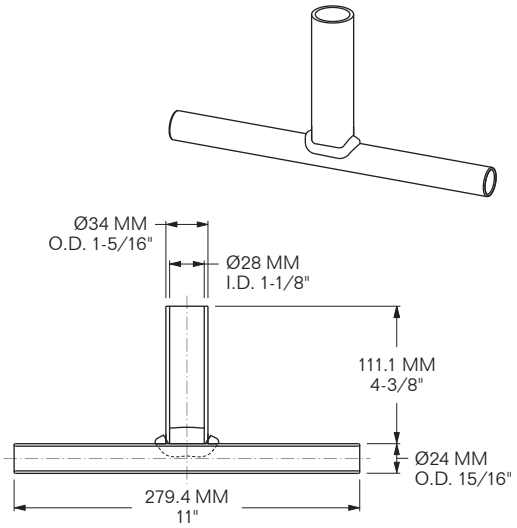

MATERIAL: GALVANIZED STEEL
WEIGHT: 0.55 Kg / 1.2 LBS

MODEL 5004-7723

T-HANDLE FOR UNLOCKING POLES
Fits 1-1/4" Tube

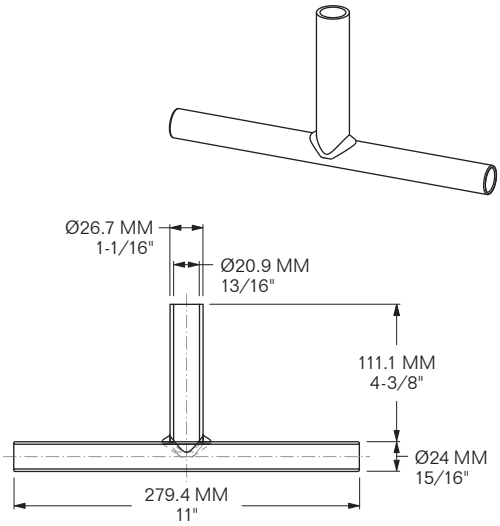

MATERIAL: GALVANIZED STEEL
WEIGHT: 0.49 Kg / 1.07 LBS

BUFFERS USA INC ®
"The Intermodal Hardware Specialists"

904-696-0010
E-mail: sales@buffersusa.com